SECED 2015 Conference: Earthquake Risk and Engineering towards a Resilient World
9-10 July 2015, Cambridge UK

THE USE OF DUCTILITY IN NUCLEAR FACILITIES

Paul DOYLE[1]

Abstract
The author works for a nuclear licensee, and was responsible for drafting the design document that specifies the requirements for seismic design (MED, 2009 updated 2014). Within this document is the statement that design to achieve ductility is just as important as strength design. This paper examines the background about why this statement has been made; and how ductile detailing can be achieved in practice.

The paper starts with a discussion about what is meant by ductility in the abstract then concentrate on what is achieved by ductile design. A simple example based upon comparison between a conventional braced frame and an eccentrically braced frame is used to illustrate this. This example is used to show how ductile details can protect a system and be used to demonstrate the capability of a structure to resist earthquakes beyond design basis.

The paper continues by describing some of the practical ways in which ductility can be incorporated into real structures taking account of the principal that stronger is not always better when considering seismic design. Reference is made to ACI, 2013 for concrete structures; and to ANSI/AISC 341, 2010 for steel structures.

The paper concludes with real examples where ductile detailing has been used for nuclear projects. Examples will cover notched connections and special concentric bracing for storage racking; and use of special concentric bracing for strengthening an existing structure;

Introduction

The nuclear industry in the UK generally designs structures and plant to resist seismic loads in an elastic manner. The beyond design basis scenario is often covered by providing an additional margin of 1.4. Often minimal attention is paid to ductile detailing. Whilst this is a safe approach, it results in structures and plant being more expensive than they need be; but just as importantly it does not provide as great a reserve against collapse had ductile detailing been considered.

The author works for a nuclear licensee, and was responsible for drafting the design document that specifies the requirements for seismic design, MED, 2009. Within this document are the following statements with regards to detailing:

> *The design detailing shall focus on providing adequate ductility at least as much as providing adequate strength.*
>
> *The overall objective of ductile detailing shall be to control the failure mechanism of the structure by suppressing brittle failure modes and thereby allowing inelastic deformation of the structure to occur in a predictable manner. Brittle failure modes shall be suppressed by having greater capacity than ductile failure modes.*
>
> *Brittle failure modes are buckling of columns; shearing of beams, slabs, or walls; torsion; failure of connections; etc. Ductile failure modes are bending of beams, slabs*

[1] Senior Consultant, Jacobs UK, on long term secondment as Seismic Technical Authority at AWE, Aldermaston, Reading, UK, paul.doyle@awe.co.uk

or walls, tension in diagonal bracing, etc. Tension failure of holding down bolts designed in accordance with ACI349 may be considered to be a ductile failure mode, provided sufficient length of bolt unbonded from or outside the concrete is provided to allow inelastic strain to occur.

Inelastic action (i.e. the formation of plastic hinges) shall be limited to selected elements of the primary lateral force resisting system.

Yield of the ductile element limits the force that can be transmitted to other parts of the structure; and stops failure in a brittle manner. However, in checking the capacities of other members and modes using this principal, account shall be taken of the upper bound capacities of the inelastic ductile component, rather than the lower bound values normally used in design. The normal lower bound capacity shall continue to be used for determining the overall structural capacity.

This paper examines the background about why these statement have been made; and how ductile detailing can be achieved in practice.

Purpose of Ductile Design

What does ductile design give you? This is best illustrated by a simple example. Figure 1 shows two very simple frames. Based upon conventional practice, frame A would seem to better than frame B, in that it has greater elastic capacity and will resist an earthquake of 1.5 E, where E is the design basis earthquake. However, when ductility is taken into account, a different picture emerges.

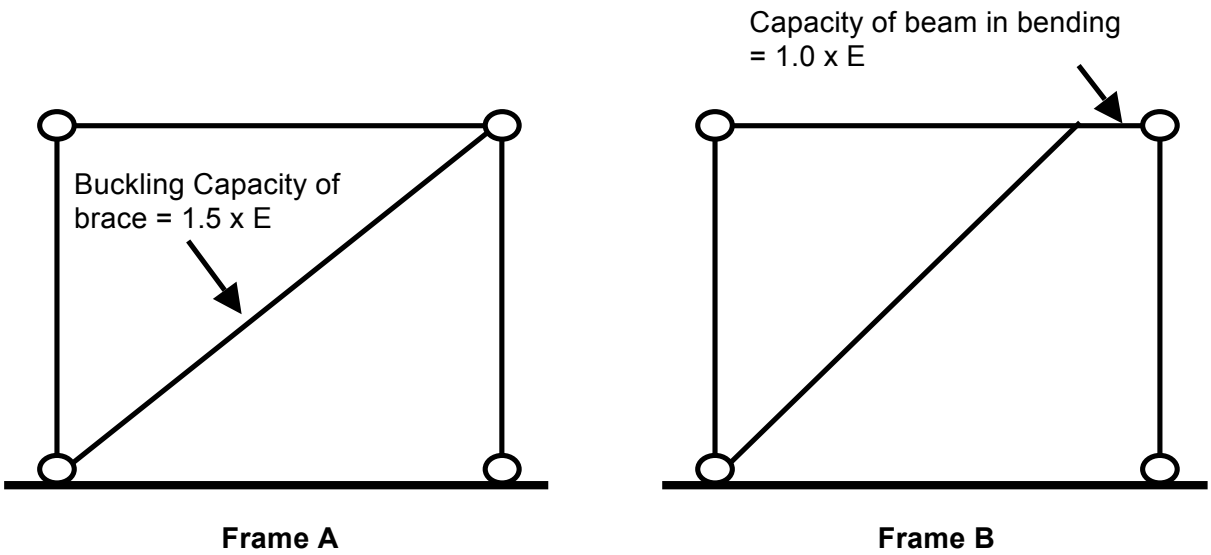

Figure 1. Comparison between Conventional Design and Ductile Design

Frame A fails in a brittle manner (buckling) and hence will collapse if the load exceeds 1.5E.

Although Frame B reaches the elastic capacity at 1.0E, it is highly ductile. Energy from the earthquake can be dissipated in the plastic hinge in the beam. The frame shown is in fact an eccentrically braced frame with a ductility factor of 5, see ASCE43, 2005. This means that the earthquake would need to be five times larger before the deformation capacity of the plastic hinge was reached. Frame B has therefore far greater capacity to resist a beyond design basis earthquake than Frame A.

In addition, the presence of the plastic hinge in frame B limits the load that can be transferred to other elements of the frame. They only need to be designed to resist the load transmitted by the elastic capacity of the hinge, albeit account has to be taken of the upper bound capacity of the hinge rather than the normal lower bound capacity used in design.

This example illustrates that a ductile frame can perform considerably better whilst at the same time having members of a lower capacity i.e. cost.

It should be recognised that the beam element of an eccentrically braced frame may need to be locally stiffened, to avoid a buckling failure, as discussed later in this paper. This can limit the cost effectiveness of this solution. This example was chosen as it illustrates vividly the difference a ductile design can make. However, there are other ductile details that can be adopted that are cost effective but do not provide as much ductility.

Effect of Ductility on Response Spectra

Using ductility does not have to be limited to providing a greater beyond design basis strength, but can be used to reduce the forces the structure is designed for, provided that some plastic deformation of the structure can be tolerated. In many, though not all nuclear structures, the safety requirement is that the structure continues to stand up and to support loads. Permanent plastic deformation can be tolerated, provided the structure is still safe. In the UK, as we are designing for an extreme event, so economic loss is rarely an issue.

Ductility can be allowed for in design by using an in-elastic response spectra in place of the conventional spectra. The in-elastic response spectra, $S_\mu(f)$, at modal frequency f, can be determined as follows, based upon ASCE43,2005. This process is illustrated in Figure 2.

- For $f < F_{PEAK\ SA}$ (see Figure 2 for definition)

$$S_\mu(f) = S_a(f) / \mu \tag{1}$$

where μ, the ductility coefficient, is given in Table 1 based upon IAEA-TECDOC-1347, 2003 and ASCE43, 2005, and $S_a(f)$ is the original (elastic) spectral acceleration.

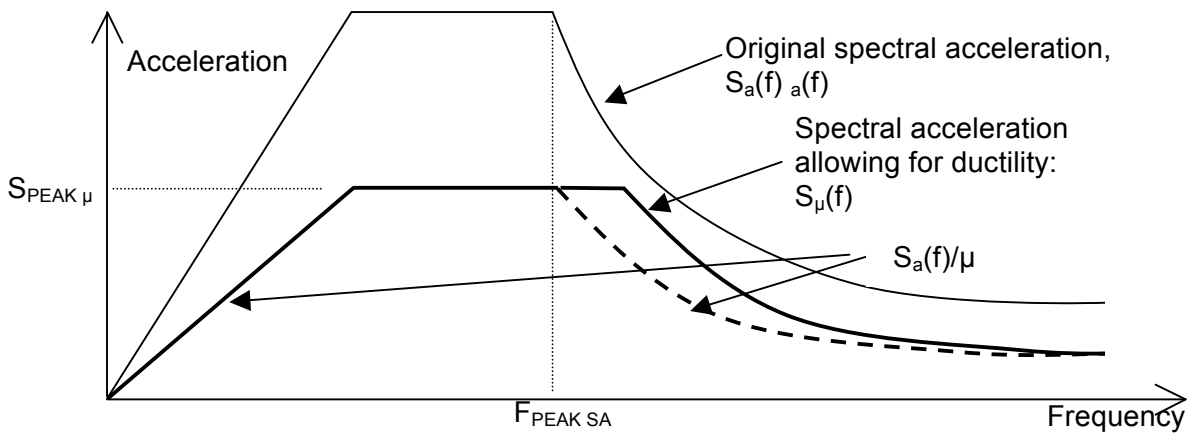

Figure 2. Ductile design spectra

- At frequencies above $F_{PEAK\ SA}$ the effect of ductility is to make the structure softer, which increases the acceleration. The reduced frequency, f_e, shall be taken as

$$f_e = f\sqrt{\frac{2}{\mu^2 + 1}} \tag{2}$$

For fe < $F_{PEAK\ SA}$ $\quad S\mu\ (f) = S_{PEAK\ \mu}$ (3)

For fe ≥ FPEAK SA $$S_\mu(f) = \frac{S_a(f_e)}{\mu} = \frac{1}{\mu} S_a\left(f\sqrt{\frac{2}{\mu^2+1}}\right) \quad (4)$$

but not greater than Sa(f)

Type of Structural System	**Ductility Coefficient μ for Performance Class**	
	B3 (Minimal deformation)	B4 (higher deformation)
Reinforced Concrete Shear Walls		
Bending controlled walls	2	2.25
Shear controlled walls	1.75	2
Moment Resisting Frame Seismic resistance is provided by moment frames capable of resisting the total prescribed forces. Code detailing rules applied		
Steel frame	3	4.5
Reinforced concrete	2.5	4
Steel Braced Frame:		
Special Concentric (Bracing Members)	3	4
Ordinary Concentric (Bracing Members)	2	2.5
Eccentric	3.5	5
Chevron Bracing	2	2.5
Dual System (Mix of any of the above systems)	Lowest value of any of the individual systems	Lowest value of any of the individual systems

Table 1. Ductility Coefficients (μ)

The in-elastic spectra described above can only be used if the structure is detailed in such a way that the system performs in a ductile manner. To achieve this the design must provide ductile details.

Practical Steps for Ductile Design

The aim of ductile design is to control the failure mechanism such that the failure mode is ductile not brittle. The first step in ductile design must therefore be to understand what the load path is and how the structure or component is going to fail. Based upon this knowledge the designer can then provide appropriate ductile detailing.

Often the way a structure can be made ductile is not by strengthening the structure but by weakening it so it can deform in a ductile manner. To many engineers, it appears counter intuitive that more reserves against failure can be provided by producing details that are weaker. It is this instinctive reaction that has led to many designs for nuclear structures in the UK being heavy with large reserves against an elastic failure criterion. Yet Seismic design in the rest of the world makes extensive use of ductility to produce economic designs that are safe. It is this practice that should be introduced into seismic design of nuclear structures in the UK.

Ductile Design of Concrete Structures

For concrete structures UK practice has been to adopt American codes, either ACI 318, 2011 or ACI 349, 2013. The latter is specifically aimed at nuclear structures and is to be preferred. Both codes cover ductile detailing in chapter 21. Most nuclear structures are formed from shear walls and slabs, and these are better covered in ACI 349, 2013. For beams and columns the requirements are similar in both codes.

For many nuclear structures, the walls used are many times longer than their height i.e. they are squat shear walls. For such walls the code requirements for ductility are satisfied without making any extra provisions.

One area of reinforced concrete detailing that must be observed to ensure that the performance is ductile is in the treatment of shear. Shear failure of concrete without links is a brittle failure mode and therefore for a ductile response it is essential that failure occurs in bending before shear.

When links are provided, the steel needs to yield before a shear failure can occur.
Hence failure of the links in shear is a ductile failure mode. However there is a sudden increase in load on the links as the concrete alone fails to carry the shear force, and so for this reason failure of links in shear is normally taken as a brittle failure mode.

Hence, any failure in shear is regarded as a brittle failure mode and it must be ensured that the section will fail in bending before shear if a ductile performance is required. This can mean that it is better to limit the amount of bending reinforcement. Alternatively it can mean that more links need to be provided. When determining the quantity of links provided it must be remembered that the steel can be stronger than the normal design strength, which is a lower bound strength. The upper bound strength is normally taken as 20% higher than the design strength to account for this.

The wall thickness for many nuclear structures is not based upon strength requirements but on other aspects such as shielding. This leads to the longitudinal reinforcement being based upon minimum reinforcement, rather than strength requirements. In such cases the large amount of reinforcement can lead to the need to provide an excessive number of links. As a licensee, we have therefore allowed designers to limit the provision of links such that the section has twice the capacity needed for the forces at the section rather than ensuring that the longitudinal reinforcement fails before the section in shear.

Ductile Design of Steel Structures
The approach to design of structural steel adopted by the author's organisation is to design in accordance with BS5950, but to provide ductile detailing in accordance with ANSI/AISC 341, 2010. The latter document is largely independent of the code used for design; and provides considerable detail on ductile design of steelwork. The following text provides a sample of some of the extensive advice that might be used.

Moment frames are designed using connections that have been pre-qualified to demonstrate that they have adequate seismic ductility. Although ANSI/AISC 341, 2010 provides details about how connections may be pre-qualified by appropriate testing, details of some pre-qualified connections are provided in ANSI/AISC 358, 2010. Figures 3 to 6 give typical pre-qualified details from this code, which also provides rules on the proportioning of such details to remain within the qualification.

Figure 6 is of particular interest, because provides another example where the beam section is deliberately weakened to achieve the ductile design concept of the beam failing in tension before the connection or column. This approach should be compared with traditional practice in the UK nuclear industry where the connection capacity is made greater than the capacity of the beam, often resulting in plating of the beam. The approach in Figure 6 not only provides a connection that is more ductile and all the advantages this gives, but is also cheaper to fabricate.

The detailing of the connections for special braced frames is shown in figure 7. It should be noted that in this type of connection the brace is welded to the face of the gusset plate,

thereby introducing local bending and a ductile failure mechanism. This another example where a connection is deliberately weakened to promote a ductile failure. Further, this form of connection is easier (i.e. cheaper) than a conventional connection where effort is made to ensure the centres of the gusset and brace line up to avoid bending.

The use of eccentric bracing was discussed earlier in the paper when the frame in figure 1 was introduced. Eccentric bracing can take many forms not just the simple example of figure 1. Some examples of eccentrically braced frames are given in figure 8. The main criterion for an eccentrically braced frame is that the element in bending must fail before any other members in the frame.

When designing an eccentrically braced frame it is necessary to ensure that the bending element does not fail in buckling of either the web or the beam as a whole. Additional stiffening is often required, as shown in figure 9.

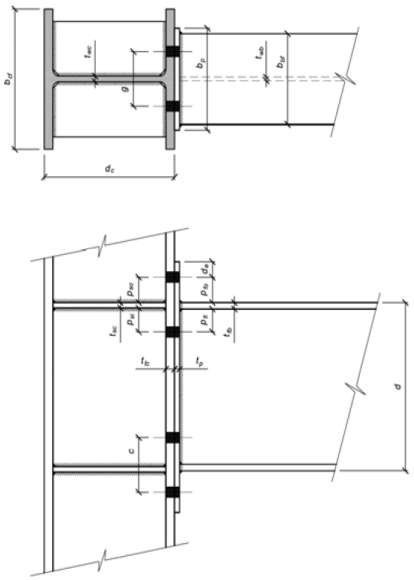

Figure 3. 4 Bolt connection, from ANSI/AISC 358, 2010

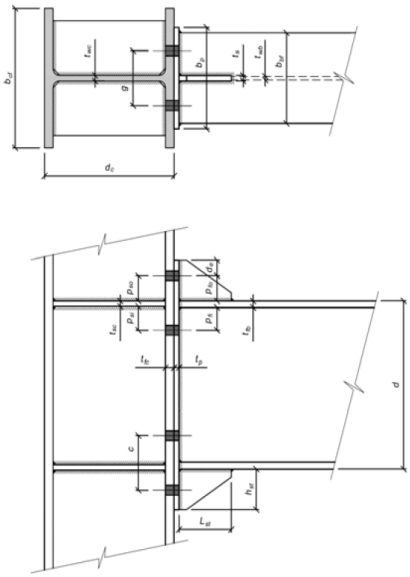

Figure 4. 4 bolt connection with stiffeners, from ANSI/AISC 358, 2010

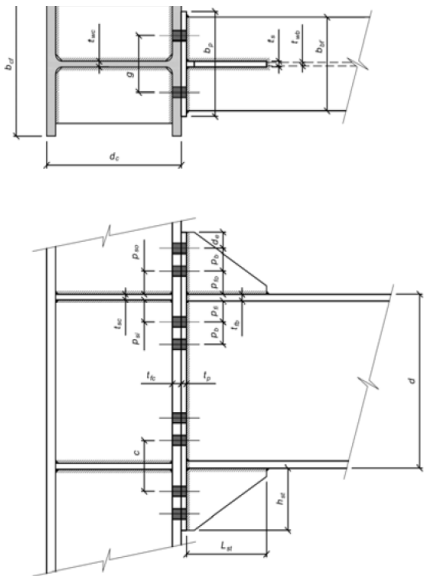

Figure 5. Eight bolt connection with stiffeners, from ANSI/AISC 358, 2010

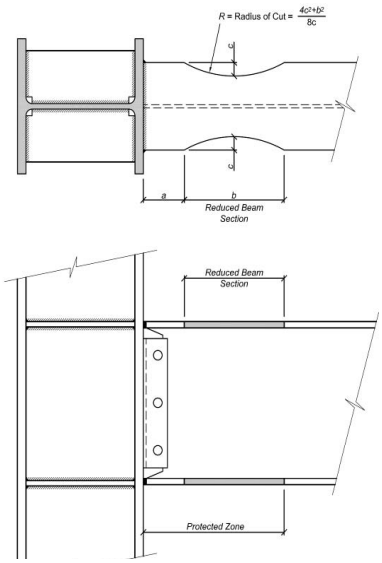

Figure 6. Reduced beam section, from ANSI/AISC 358, 2010

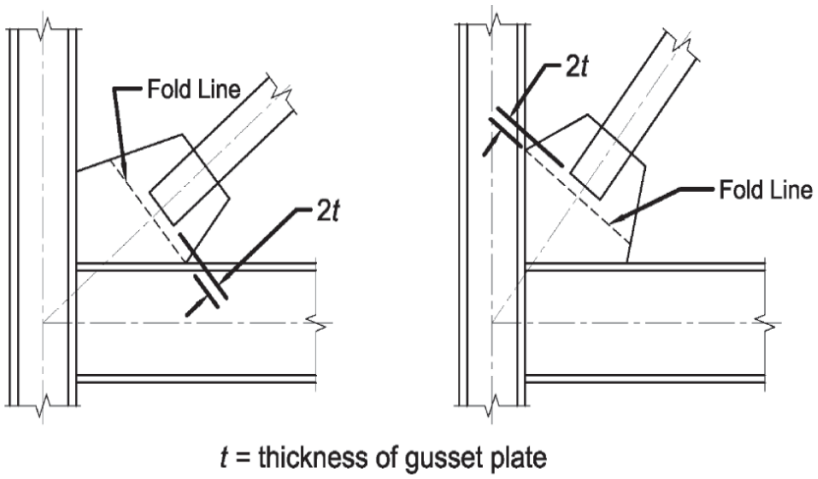

Figure 7. Brace to gusset plate connection for Special Concentric Bracing, from ANSI/AISC 34, 2010

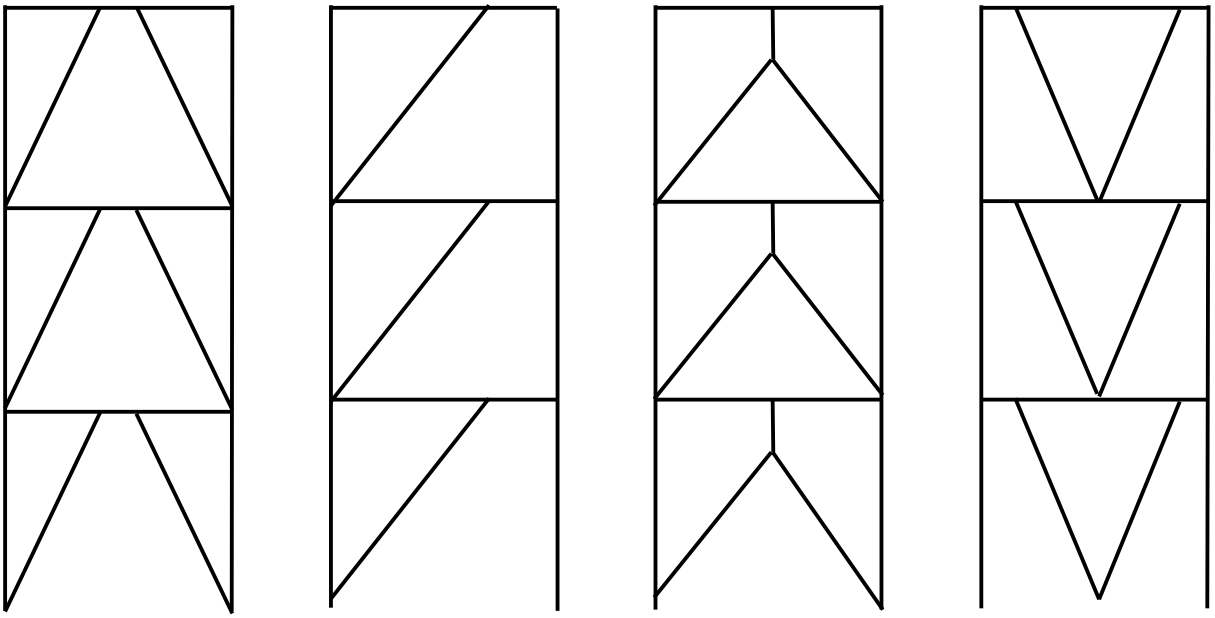

Figure 8. Typical Eccentrically Braced Frames, based on ANSI/AISC 34, 2010

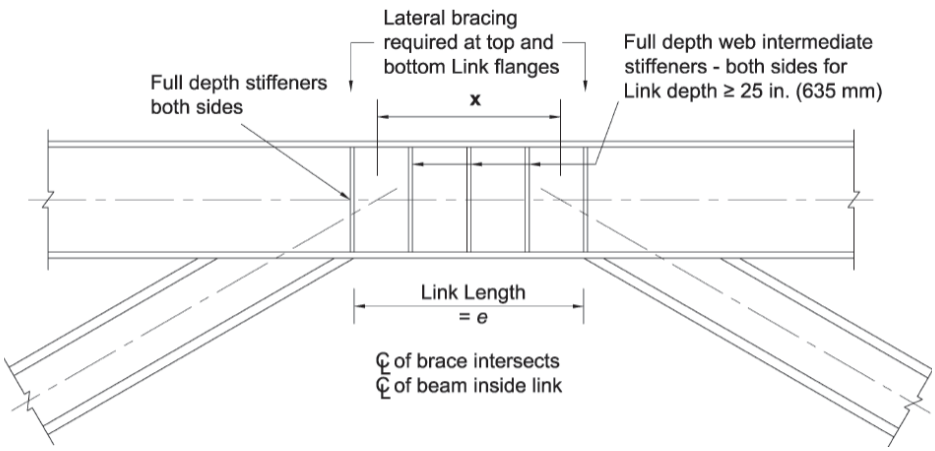

Figure 9. Eccentric Braced Frame with W-shape Bracing, from ANSI/AISC 34, 2010

Examples of Ductile Design

The final section of this paper provides two examples where nuclear structures have been designed in accordance with the principals of ductile design

The first example is for a storage rack, see figures 10 to 12. This rack relies on a moment frame in one direction; with bracing in the other direction.

For the bracing, the gusset plate is eccentric to the bracing, thereby limiting the elastic capacity of the bracing and permitting in-elastic rotation to occur. This is illustrated in figure 11.

In the moment frame direction, every other longitudinal beam is pinned; with the remaining longitudinal beams fixed. The bottom bay is braced. Where the longitudinal members are required to carry moment, the capacity of the section is limited by providing a reduced beam section, see figure 12.

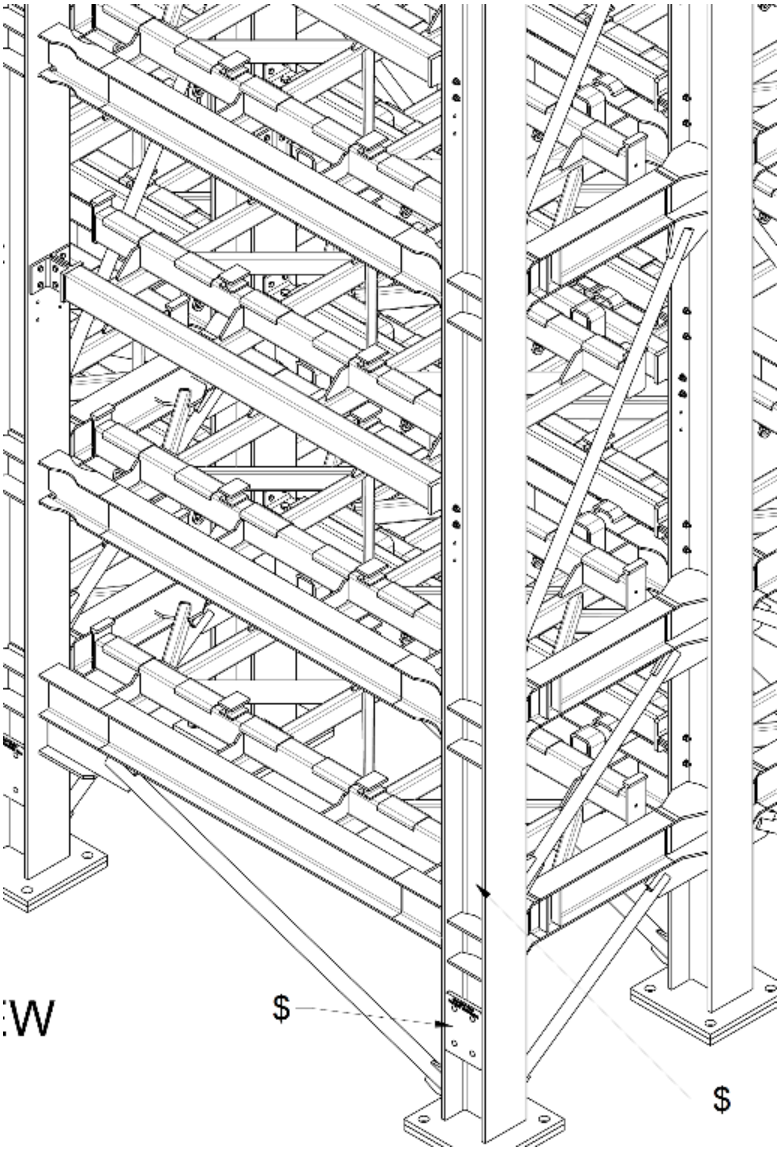

Figure 10. Storage Rack with Ductile Bracing and reduced beam section

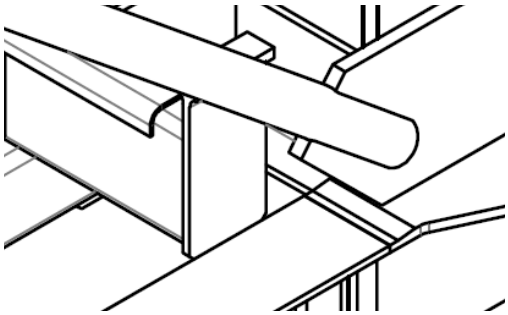

Figure 11. Detail of Bracing Connection in Storage Rack

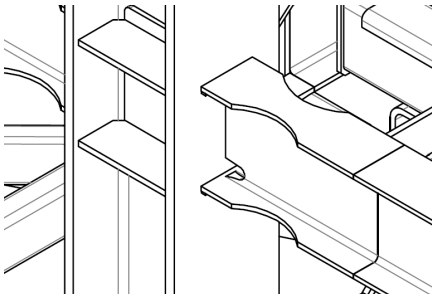

Figure 12. Detail of Reduced Beam in Storage Rack

The second example is where new bracing needed to be provided for an existing building. This is illustrated in figures 13 and 14. Again the extended gusset plates to allow rotation can be clearly seen.

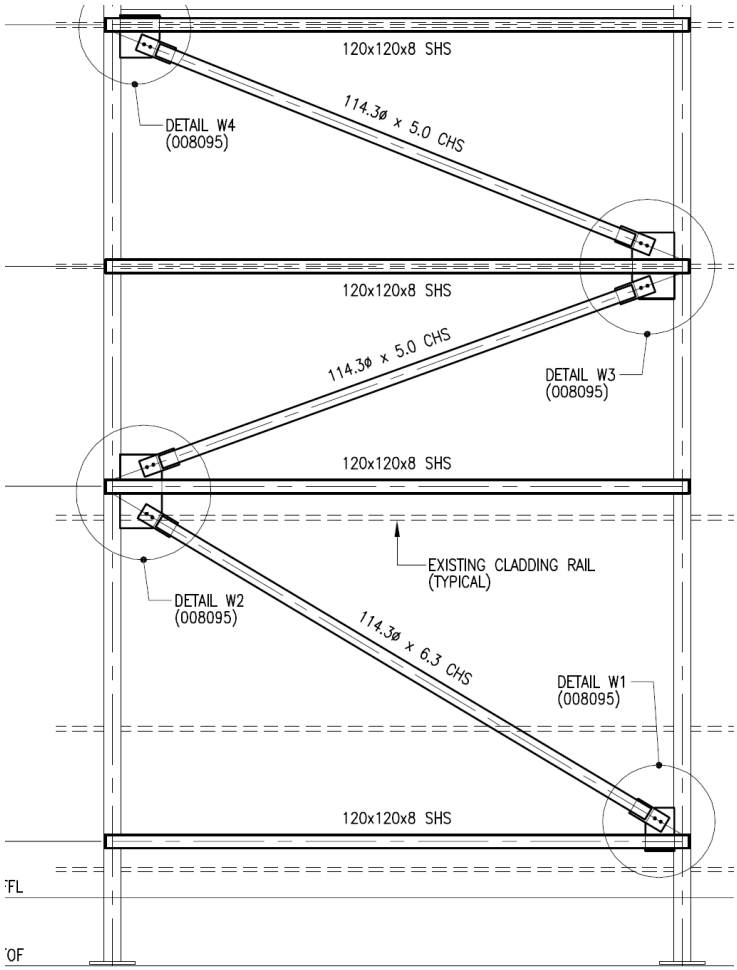

Figure 13. New bracing to Existing Building

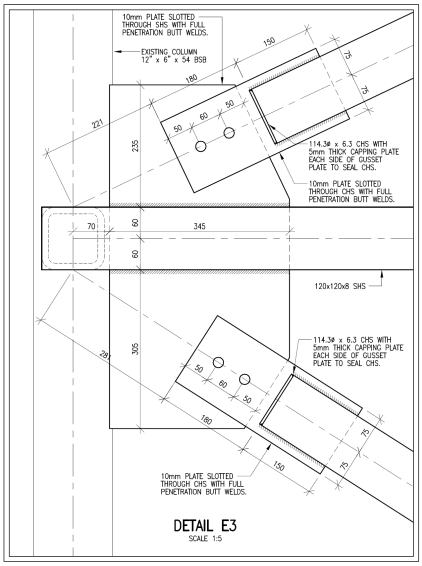

Figure 14. Detail of Bracing to Existing Building

Conclusion

The paper has provided the background behind why it is considered important to provide ductility in a structure. It has discussed how ductility can be used both to provide additional margin in a structure for beyond design basis effects; and if some inelastic deformation tolerated a more economic structure. Practical ways in which structures can be detailed in a ductile manner have been discussed; and illustrated by two examples form nuclear structures.

REFERENCES

ACI 318-11, Building Code Requirements for Structural Concrete and Commentary, American Concrete Institute, 2011

ACI 349-13, Code Requirements for Nuclear Safety Related Concrete Structures, American Concrete Institute, 2013

ANSI/AISC 341-10, Seismic Provisions for Structural Steel Buildings, American National Standards Institute / American Institute of Steel Construction, 2010

ANSI/AISC 358-10, Pre-qualified Connections for Special and Intermediate Moment Frames in Seismic Applications American National Standards Institute / American Institute of Steel Construction, 2010

ASCE 43-05, Seismic Design Criteria for Structures, Systems and Components in Nuclear Facilities, American Society of Civil Engineers, 2005

IAEA-TECDOC-1347, Consideration of external events in the design of nuclear facilities other than nuclear power plants, with emphasis on earthquakes, International Atomic Energy Association, March 2003

MED, Mandatory Elements Document – Seismic Design and Assessment of Structures, Systems and Components, DMP/LL42728995, Issue 1, 23rd March 2009

MED, Mandatory Elements Document – Seismic Design and Assessment of Structures, Systems and Components", MER-420-000217, Issue 2, 20th March 2014,